Cambridge Assessment International Education

Cambridge IGCSE™

CANDIDATE NAME	

CENTRE NUMBER						CANDIDATE NUMBER				

CHEMISTRY **0620/43**

Paper 4 Theory (Extended) **October/November 2022**

1 hour 15 minutes

You must answer on the question paper.

No additional materials are needed.

INSTRUCTIONS

- Answer **all** questions.
- Use a black or dark blue pen. You may use an HB pencil for any diagrams or graphs.
- Write your name, centre number and candidate number in the boxes at the top of the page.
- Write your answer to each question in the space provided.
- Do **not** use an erasable pen or correction fluid.
- Do **not** write on any bar codes.
- You may use a calculator.
- You should show all your working and use appropriate units.

INFORMATION

- The total mark for this paper is 80.
- The number of marks for each question or part question is shown in brackets [ ].
- The Periodic Table is printed in the question paper.

This document has **16** pages. Any blank pages are indicated.

IB22 11_0620_43/4RP
© UCLES 2022

[Turn over

www.exam-mate.com

1 Atoms and ions are made from small particles called electrons, neutrons and protons.

(a) Complete the table.

particle	relative charge	relative mass
electron	–1	$\frac{1}{1840}$
neutron		
proton		

[2]

(b) Information about atoms and ions, **A**, **B** and **C**, is shown in the table.

Complete the table.

atom or ion	number of electrons	number of neutrons	number of protons	symbol
A	18		20	$^{42}_{20}Ca^{2+}$
B		18		$^{35}_{17}Cl$
C	18	16	16	

[6]

[Total: 8]

© UCLES 2022

www.exam-mate.com

2 The table shows the melting points, boiling points and electrical conductivities of six substances, **D**, **E**, **F**, **G**, **H** and **I**.

substance	melting point / °C	boiling point / °C	conducts electricity when solid	conducts electricity when liquid
D	1083	2567	yes	yes
E	–117	79	no	no
F	3550	4827	no	no
G	119	445	no	no
H	–210	–196	no	no
I	801	1413	no	yes

(a) Identify the substance, **D**, **E**, **F**, **G**, **H** or **I**, which is:

(i) a liquid at 25 °C ..... [1]

(ii) a gas at 25 °C ..... [1]

(iii) a solid consisting of simple molecules at 25 °C. ..... [1]

(b) Identify the substance, **D**, **E**, **F**, **G**, **H** or **I**, which is a metal. Give a reason for your choice.

substance .....

reason .....
[2]

(c) Identify the substance, **D**, **E**, **F**, **G**, **H** or **I**, which has a macromolecular structure. Give **two** reasons for your choice.

substance .....

reason 1 .....

reason 2 .....
[3]

(d) Identify the substance, **D**, **E**, **F**, **G**, **H** or **I**, which is an ionic solid. Give a reason for your choice.

substance .....

reason .....

.....
[2]

[Total: 10]

www.exam-mate.com

3 Aluminium is extracted from its ore by electrolysis.

(a) Name the ore of aluminium which consists mainly of aluminium oxide.

..... [1]

(b) State what is meant by the term *electrolysis*.

.....

..... [2]

(c) Electrolysis is carried out on aluminium oxide dissolved in molten cryolite.

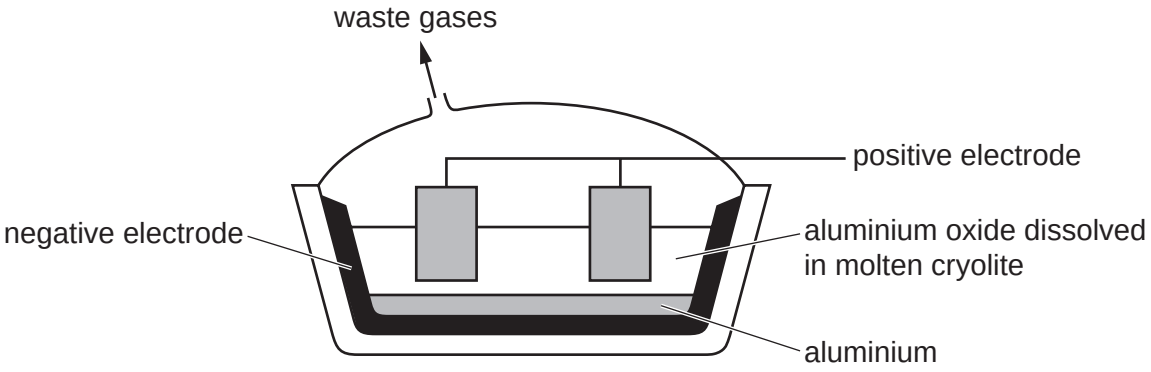

(i) Give **two** reasons why the electrolysis is carried out on aluminium oxide dissolved in molten cryolite instead of electrolysing molten aluminium oxide only.

1 .....

2 .....
[2]

(ii) Write the ionic half-equation for the reaction occurring at the negative electrode.

..... [2]

(iii) The positive electrodes are made of carbon.

Explain why the positive carbon electrodes are replaced regularly.

.....

..... [2]

www.exam-mate.com

(d) Aluminium is more reactive than copper.

When aluminium is added to aqueous copper(II) sulfate, no immediate reaction is seen.

Explain why.

..... [1]

(e) Aluminium reacts with oxygen to form an amphoteric oxide.

(i) State what is meant by the term *amphoteric*.

.....

..... [1]

(ii) The reaction between aluminium oxide and aqueous sodium hydroxide forms a salt containing the negative ion AlO_2^-. The only other product is water.

Write a chemical equation for the reaction between aluminium oxide and aqueous sodium hydroxide.

..... [2]

(f) Gallium is in the same group as aluminium and forms similar compounds.

Predict the formulae of:

gallium(III) chloride .....

gallium(III) sulfate. .....
[2]

[Total: 15]

www.exam-mate.com

4 This question is about compounds of phosphorus.

(a) Gaseous phosphorus(V) chloride decomposes into gaseous phosphorus(III) chloride and gaseous chlorine.

When the three gases are present in a closed container the system reaches equilibrium.

$$PCl_5(g) \rightleftharpoons PCl_3(g) + Cl_2(g)$$

(i) Complete the table using only the words *increases*, *decreases* or *no change*.

	effect on the rate of the forward reaction	effect on the equilibrium yield ($PCl_3(g)$ and $Cl_2(g)$)
increasing the temperature		increases
decreasing the pressure		
adding a catalyst		no change

[4]

(ii) The table shows that when the temperature increases, the equilibrium yields of $PCl_3(g)$ and $Cl_2(g)$ increase.

State what conclusion can be made from this.

..... [1]

(b) Complete the dot-and-cross diagram to show the electron arrangement in a molecule of phosphorus(III) chloride, PCl_3. Show outer shell electrons only.

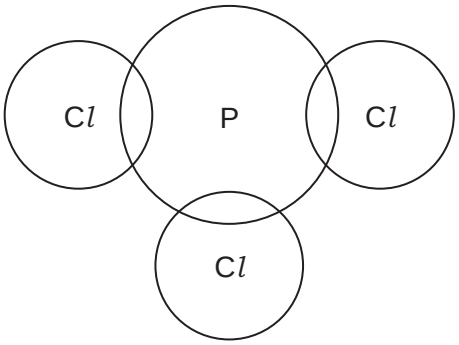

[2]

www.exam-mate.com

(c) Phosphorus oxychloride has the formula $POCl_3$.

Phosphorus oxychloride is the only product of the reaction between phosphorus(V) chloride, PCl_5, and phosphorus(V) oxide, P_4O_{10}.

Write a chemical equation for the reaction between phosphorus(V) chloride and phosphorus(V) oxide.

..... [2]

(d) Compound **X** has the following composition by mass.

H, 3.66%; P, 37.80%; O, 58.54%

Calculate the empirical formula of compound **X**.

empirical formula = ... [2]

(e) Compound **Y** has the empirical formula H_3PO_4 and a relative molecular mass of 98.

Deduce the molecular formula of compound **Y**.

molecular formula = ... [1]

[Total: 12]

www.exam-mate.com

BLANK PAGE

www.exam-mate.com

5 This question is about sulfuric acid, H_2SO_4, and salts that can be made from sulfuric acid.

(a) Sulfuric acid is manufactured by the Contact process.

stage 1 Molten sulfur burns in air to produce sulfur dioxide.

stage 2 Sulfur dioxide reacts with oxygen to form sulfur trioxide, SO_3.

stage 3 Sulfur trioxide reacts with concentrated sulfuric acid to form oleum, $H_2S_2O_7$.

stage 4 Oleum is converted into sulfuric acid.

(i) The equation for the reaction in **stage 2** is shown.

$$2SO_2 + O_2 \rightleftharpoons 2SO_3$$

State the temperature and pressure used in **stage 2**.

Name the catalyst used in **stage 2**.

temperature ..... °C

pressure ..... atm

catalyst .....
[3]

(ii) Write the chemical equation for the reaction in **stage 3**.

..... [1]

(iii) Name the substance that reacts with oleum in **stage 4**.

..... [1]

(b) Name the black solid that is produced when concentrated sulfuric acid is added to sugar, $C_{12}H_{22}O_{11}$.

..... [1]

www.exam-mate.com

(c) Dilute sulfuric acid and aqueous potassium hydroxide are used to make aqueous potassium sulfate.

$$H_2SO_4 + 2KOH \rightarrow K_2SO_4 + 2H_2O$$

The method includes use of the following apparatus.

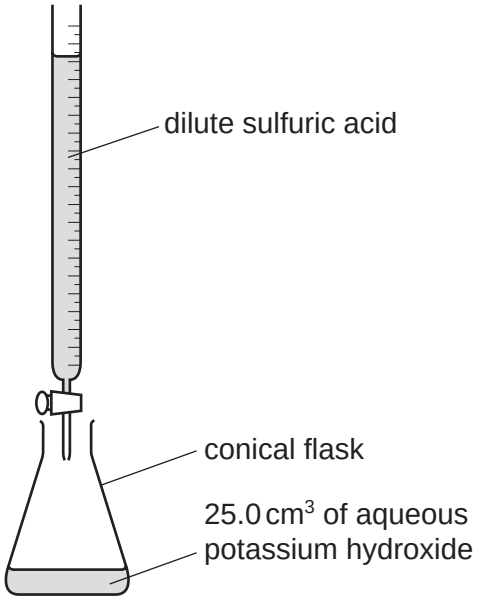

(i) Calculate the volume of 0.0625 mol / dm³ dilute sulfuric acid, H_2SO_4, that completely reacts with 25.0 cm³ of 0.100 mol / dm³ potassium hydroxide, KOH, to produce aqueous potassium sulfate.

Use the following steps.

- Calculate the number of moles of KOH in 25.0 cm³ of 0.100 mol / dm³ KOH.

= ..... mol

- Deduce the number of moles of H_2SO_4 that react with KOH.

= ..... mol

www.exam-mate.com

- Calculate the volume of H_2SO_4 required.

volume = ... cm^3
[3]

(ii) The experiment is repeated using the same volume and concentration of potassium hydroxide and the same concentration of dilute sulfuric acid. In this second experiment, the product is aqueous potassium hydrogensulfate, $KHSO_4$.

$$H_2SO_4 + KOH \rightarrow KHSO_4 + H_2O$$

Use your answer to **(c)(i)** and the equation to deduce the volume of H_2SO_4 required.

volume = ... cm^3 [1]

(d) Aqueous potassium hydrogensulfate, $KHSO_4(aq)$, contains the ions $K^+(aq)$, $H^+(aq)$ and $SO_4^{2-}(aq)$.

Describe the observations in the following tests.

(i) A flame test is carried out on aqueous potassium hydrogensulfate.

..... [1]

(ii) Solid copper(II) carbonate is added to aqueous potassium hydrogensulfate.

.....

..... [2]

(iii) An acidic solution containing aqueous barium ions, $Ba^{2+}(aq)$, is added to aqueous potassium hydrogensulfate.

..... [1]

(e) Write the ionic equation for the reaction in **(d)(iii)**.

Include state symbols.

..... [3]

[Total: 17]

www.exam-mate.com

6 **(a)** Chloroethene ($CH_2{=}CHCl$) can be manufactured from 1,2-dichloroethane (CH_2ClCH_2Cl).

The equation can be represented as shown.

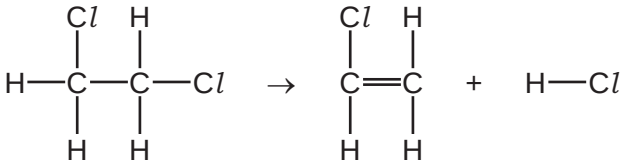

(i) Some bond energies are given.

bond	bond energy in kJ/mol
C–C	350
C=C	610
C–Cl	340
C–H	410
H–Cl	430

Use the bond energies in the table to calculate the energy change, in kJ/mol, of the reaction.

Use the following steps.

- Calculate the energy needed to break bonds.

energy = ... kJ

- Calculate the energy released when bonds form.

energy = ... kJ

www.exam-mate.com

- Calculate the energy change of the reaction.

energy change of the reaction = ... kJ/mol
[3]

(ii) Deduce whether the energy change for this reaction is exothermic or endothermic.

Give a reason for your answer.

.....

..... [1]

(b) Part of a synthetic polymer is shown.

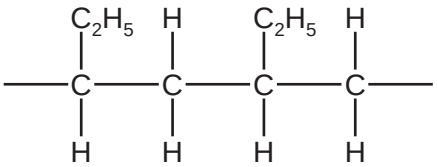

(i) State the number of monomer units that are needed to make the part of the polymer shown.

..... [1]

(ii) Name and draw the structure of the monomer used to make this polymer. Show all of the atoms and all of the bonds.

name .....

structure

[3]

(iii) State the empirical formula of the polymer.

..... [1]

www.exam-mate.com

(c) Proteins are natural polymers.

Proteins are broken down into amino acids. The process is similar to how complex carbohydrates are broken down to give simple sugars.

(i) Name the type of reaction in which proteins are broken down into amino acids.

..... [1]

(ii) Name **two** types of substance that are used to break down proteins into amino acids.

1 .....

2 .....
[2]

(iii) Amino acids are colourless.

A sample containing a mixture of amino acids is separated. Each amino acid is detected and identified.

- Name the process used to separate the amino acids.

.....

- Name the type of substance used to detect the amino acids.

.....

- Give the symbol of the value used to determine the identity of each amino acid after separation and detection.

.....
[3]

(d) Proteins are natural polymers. Proteins contain amide linkages.

Synthetic polyamides also contain amide linkages.

(i) Name a synthetic polyamide.

..... [1]

(ii) Identify the **two** functional groups present in the monomers used to produce synthetic polyamides.

1 .....

2 .....
[2]

[Total: 18]

www.exam-mate.com

BLANK PAGE

Permission to reproduce items where third-party owned material protected by copyright is included has been sought and cleared where possible. Every reasonable effort has been made by the publisher (UCLES) to trace copyright holders, but if any items requiring clearance have unwittingly been included, the publisher will be pleased to make amends at the earliest possible opportunity.

To avoid the issue of disclosure of answer-related information to candidates, all copyright acknowledgements are reproduced online in the Cambridge Assessment International Education Copyright Acknowledgements Booklet. This is produced for each series of examinations and is freely available to download at www.cambridgeinternational.org after the live examination series.

Cambridge Assessment International Education is part of Cambridge Assessment. Cambridge Assessment is the brand name of the University of Cambridge Local Examinations Syndicate (UCLES), which is a department of the University of Cambridge.

www.exam-mate.com

The Periodic Table of Elements

Key

atomic number
atomic symbol
name
relative atomic mass

Group

I	II											III	IV	V	VI	VII	VIII
							1 H hydrogen 1										2 He helium 4
3 Li lithium 7	4 Be beryllium 9											5 B boron 11	6 C carbon 12	7 N nitrogen 14	8 O oxygen 16	9 F fluorine 19	10 Ne neon 20
11 Na sodium 23	12 Mg magnesium 24											13 Al aluminium 27	14 Si silicon 28	15 P phosphorus 31	16 S sulfur 32	17 Cl chlorine 35.5	18 Ar argon 40
19 K potassium 39	20 Ca calcium 40	21 Sc scandium 45	22 Ti titanium 48	23 V vanadium 51	24 Cr chromium 52	25 Mn manganese 55	26 Fe iron 56	27 Co cobalt 59	28 Ni nickel 59	29 Cu copper 64	30 Zn zinc 65	31 Ga gallium 70	32 Ge germanium 73	33 As arsenic 75	34 Se selenium 79	35 Br bromine 80	36 Kr krypton 84
37 Rb rubidium 85	38 Sr strontium 88	39 Y yttrium 89	40 Zr zirconium 91	41 Nb niobium 93	42 Mo molybdenum 96	43 Tc technetium –	44 Ru ruthenium 101	45 Rh rhodium 103	46 Pd palladium 106	47 Ag silver 108	48 Cd cadmium 112	49 In indium 115	50 Sn tin 119	51 Sb antimony 122	52 Te tellurium 128	53 I iodine 127	54 Xe xenon 131
55 Cs caesium 133	56 Ba barium 137	57–71 lanthanoids	72 Hf hafnium 178	73 Ta tantalum 181	74 W tungsten 184	75 Re rhenium 186	76 Os osmium 190	77 Ir iridium 192	78 Pt platinum 195	79 Au gold 197	80 Hg mercury 201	81 Tl thallium 204	82 Pb lead 207	83 Bi bismuth 209	84 Po polonium –	85 At astatine –	86 Rn radon –
87 Fr francium –	88 Ra radium –	89–103 actinoids	104 Rf rutherfordium –	105 Db dubnium –	106 Sg seaborgium –	107 Bh bohrium –	108 Hs hassium –	109 Mt meitnerium –	110 Ds darmstadtium –	111 Rg roentgenium –	112 Cn copernicium –		114 Fl flerovium –		116 Lv livermorium –		

lanthanoids	57 La lanthanum 139	58 Ce cerium 140	59 Pr praseodymium 141	60 Nd neodymium 144	61 Pm promethium –	62 Sm samarium 150	63 Eu europium 152	64 Gd gadolinium 157	65 Tb terbium 159	66 Dy dysprosium 163	67 Ho holmium 165	68 Er erbium 167	69 Tm thulium 169	70 Yb ytterbium 173	71 Lu lutetium 175
actinoids	89 Ac actinium –	90 Th thorium 232	91 Pa protactinium 231	92 U uranium 238	93 Np neptunium –	94 Pu plutonium –	95 Am americium –	96 Cm curium –	97 Bk berkelium –	98 Cf californium –	99 Es einsteinium –	100 Fm fermium –	101 Md mendelevium –	102 No nobelium –	103 Lr lawrencium –

The volume of one mole of any gas is 24 dm^3 at room temperature and pressure (r.t.p.).

www.exam-mate.com